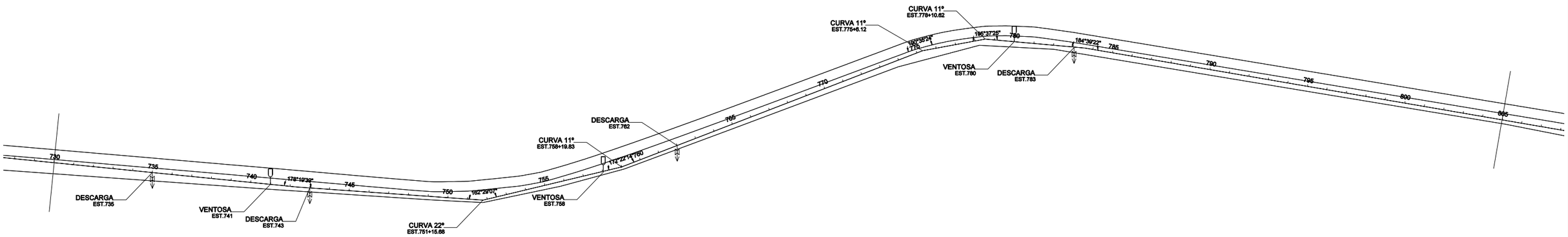

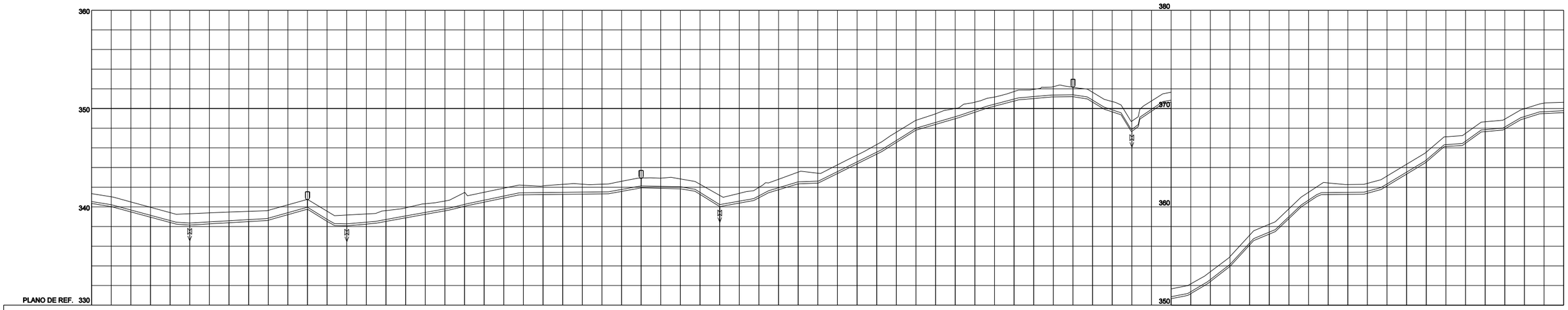

ESTACA	730	731	732	733	734	735	736	737	738	739	740	741	742	743	744	745	746	747	748	749	750	751	752	753	754	755	756	757	758	759	760	761	762	763	764	765	766	767	768	769	770	771	772	773	774	775	776	777	778	779	780	781	782	783	784	785	786	787	788	789	790	791	792	793	794	795	796	797	798	799	800	801	802	803	804	805
COTA DO TERRENO NATURAL(m)	341.35	341.02	340.50	339.98	339.41	339.30	339.39	339.47	339.54	339.64	340.20	340.78	339.85	339.16	339.27	339.62	339.90	340.31	340.59	341.48	341.48	341.90	342.20	342.12	342.28	342.31	342.31	342.60	342.83	342.81	342.84	342.30	341.17	341.38	341.98	342.81	343.53	343.42	344.27	345.27	346.34	346.39	346.55	347.60	348.90	349.47	350.01	350.95	351.17	351.73	351.95	352.22	352.16	351.65	350.71	349.66	348.72	350.77	351.98	352.16	353.40	354.95	357.12	358.23	359.80	361.48	362.43	362.27	362.39	363.13	363.34	364.54	365.57	367.13	367.13	368.48	367.68	367.92	368.92	369.98	369.49	370.95	370.84
COTA DA GERATRIZ INFERIOR DO TUBO(m)	340.35	340.02	339.48	338.95	338.41	338.15	338.27	338.38	338.50	338.64	339.20	339.78	338.52	338.07	338.24	338.52	338.88	339.24	339.59	340.05	340.48	340.90	341.23	341.25	341.29	341.30	341.32	341.57	341.93	341.88	341.84	341.27	340.03	340.38	340.92	341.74	342.34	342.42	343.39	344.38	345.38	346.55	347.60	348.39	348.97	349.62	350.24	350.78	351.02	351.18	351.20	350.65	349.66	348.66	347.66	346.72	350.66	351.17	352.41	353.95	355.12	357.23	358.80	360.49	361.25	361.27	361.39	362.13	363.34	364.57	366.13	366.48	367.68	367.92	368.98	369.49	369.59	370.84
DISTÂNCIA PARCIAL/ ACUMULADA(m)	556/2.85	20.00	556/2.85	20.00	556/2.85	20.00	557/2.85	20.00	557/2.85	20.00	557/2.85	20.00	557/2.85	20.00	558/2.85	20.00	558/2.85	20.00	558/2.85	20.00	559/2.85	20.00	559/2.85	20.00	559/2.85	20.00	559/2.85	20.00	559/2.85	20.00	560/2.85	20.00	560/2.85	20.00	560